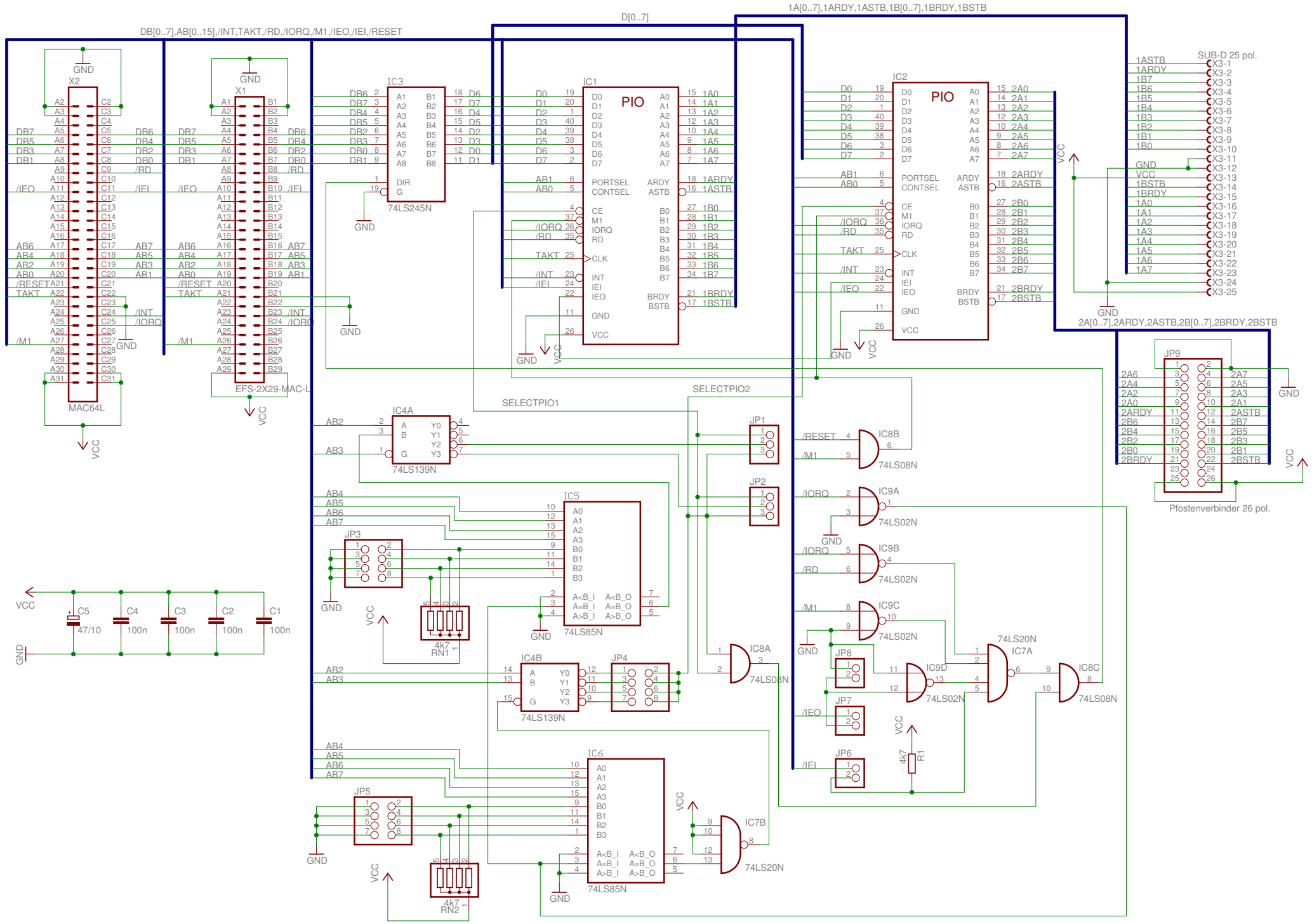
DB[0..7],AB[0..15],/INT,TAKT,/RD,/IORQ,/M1,/IEO,/IEI,/RESET
D[0..7]
1A[0..7],1ARDY,1ASTB,1B[0..7],1BRDY,1BSTB
2A[0..7],2ARDY,2ASTB,2B[0..7],2BRDY,2BSTB
SUB-D 25 pol.
Pfostenverbinder 26 pol.
MAC64L
EFS-2X29-MAC-L
74LS245N
PIO
74LS139N
74LS85N
74LS08N
74LS02N
74LS20N
SELECTPIO1
SELECTPIO2
GND
VCC